SUPERIOR METAL PRODUCTS LLC

877-445-1200 • 205-945.5694
www.smp.com

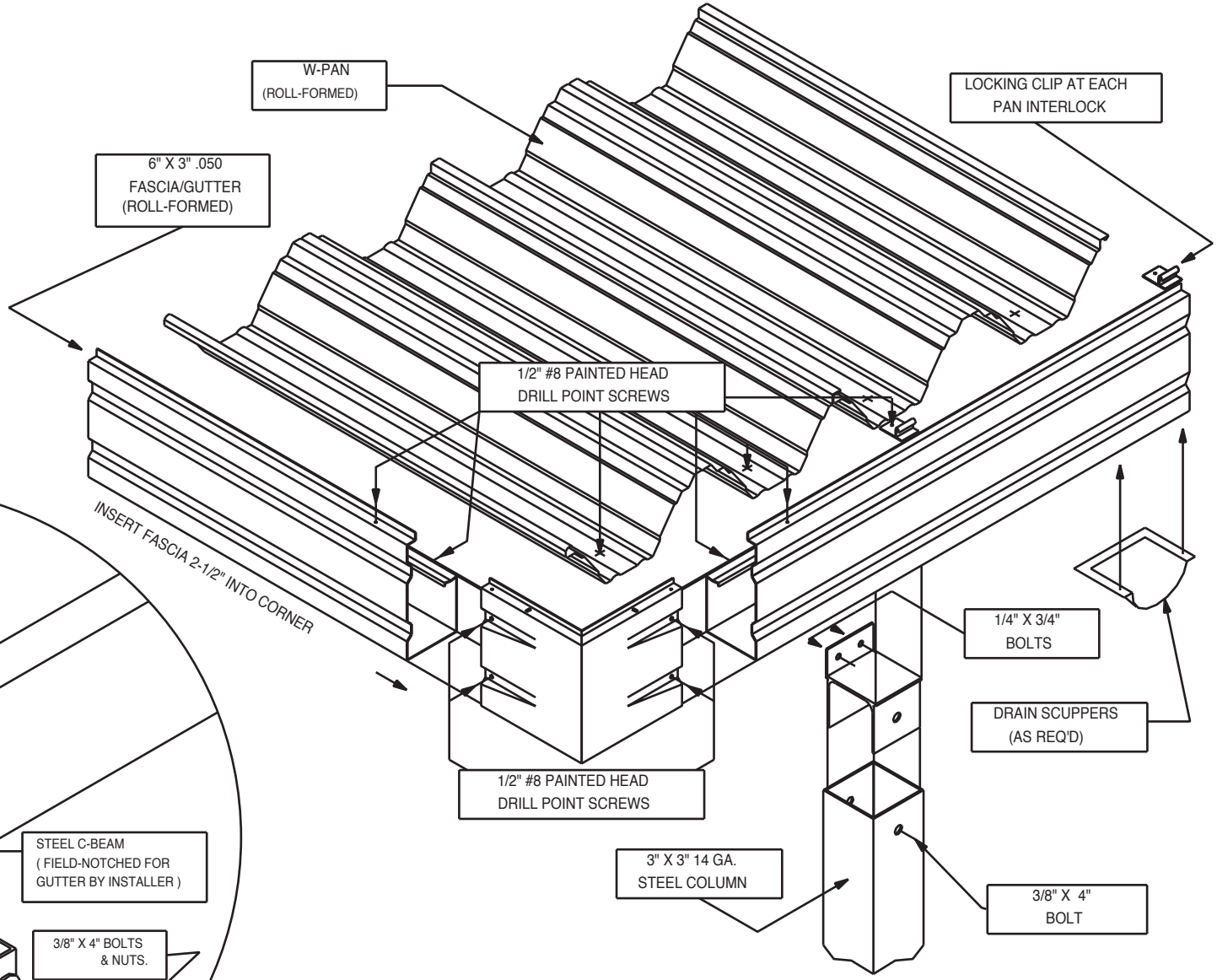

TYPICAL ASSEMBLY

(POST UNDER GUTTER)

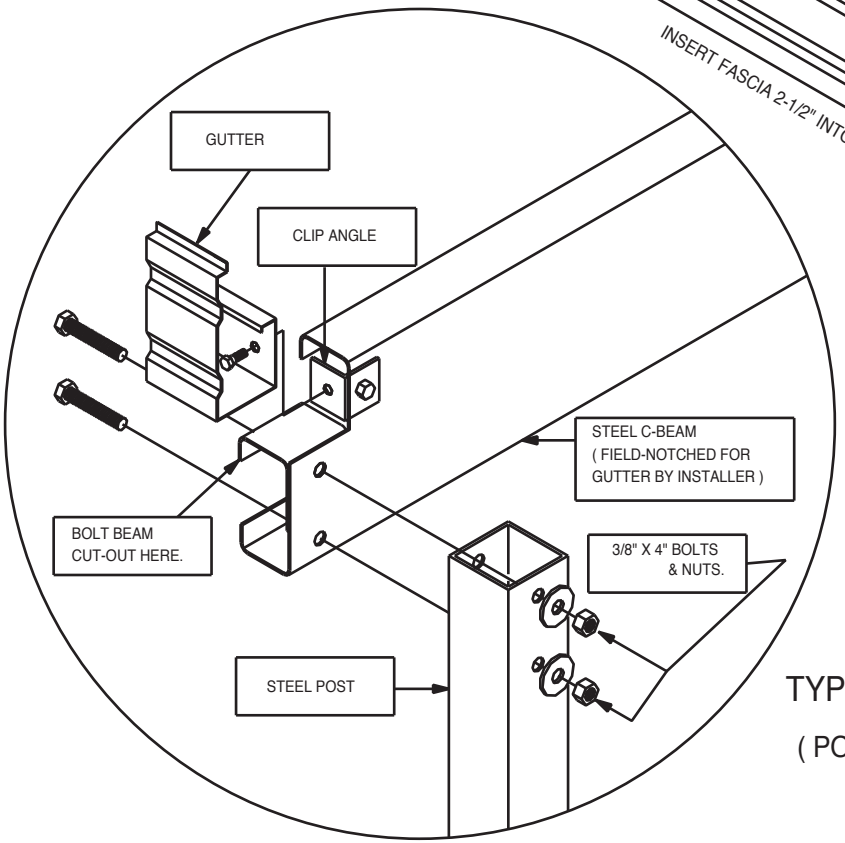

TYPICAL ASSEMBLY

(POST TO BEAM)

SUPERIOR METAL PRODUCTS LLC	TYPICAL ROLLFORMED CANOPY	1 OF 1